1.27mm pitch Pin Header

- THT - single row straight

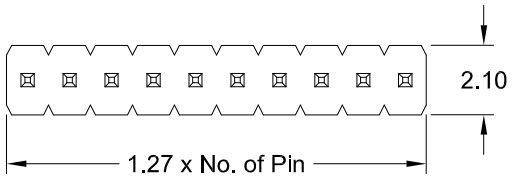

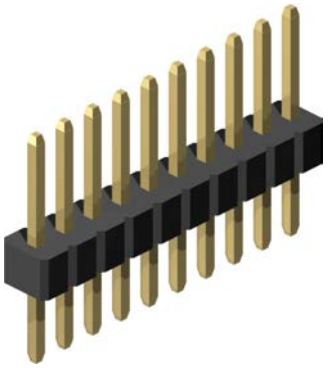

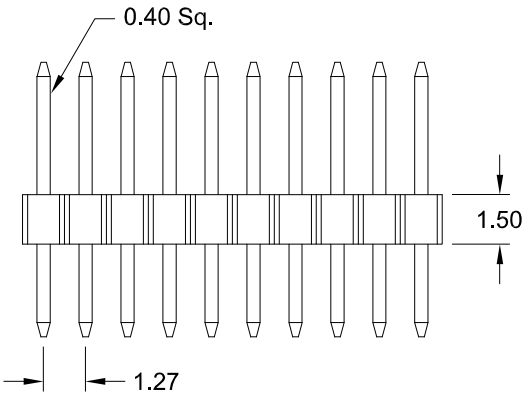

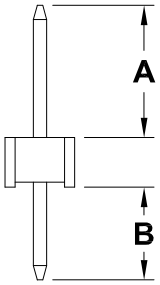

Specifications

Current rating		1 A
Insulation resistance		1000 MΩ min.
Withstanding voltage		500 V AC
Operating temperature		- 40°C to +105°C
Contact material	*(RoHS compliant)*	Copper alloy
Insulator material	*(RoHS compliant)*	PA6T UL 94 V-0

PCB Hole Layout

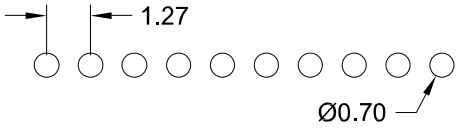

How to order

SL1 - xxx - B xxx/x - 55/11

Nbr of pins
002 to **050**

Pin code	DIM "**A**"	DIM "**B**"
083/0	4.00 mm	2.80 mm
083/1	1.70 mm	2.40 mm
083/2	3.90 mm	3.90 mm
083/3	4.50 mm	2.80 mm
083/4	3.00 mm	3.00 mm
083/5	8.90 mm	7.60 mm
083/6	3.00 mm	2.30 mm
083/7	3.60 mm	2.80 mm
083/8	3.00 mm	2.80 mm
other dimensions on request		

Plating
55 = Gold
other platings on request

1.27mm pitch Pin Header
- THT - dual row straight

S063/x & S064/x style

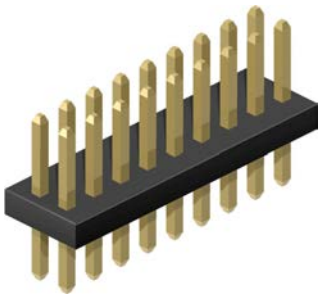

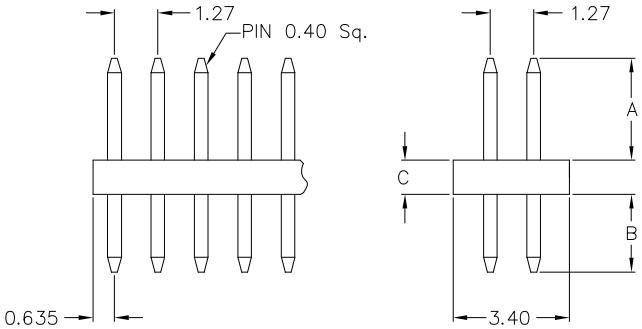

S081/x style

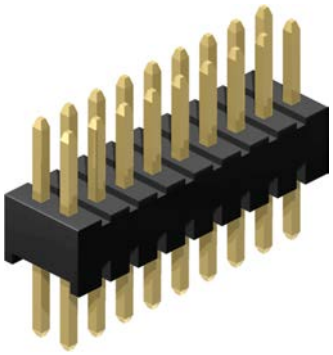

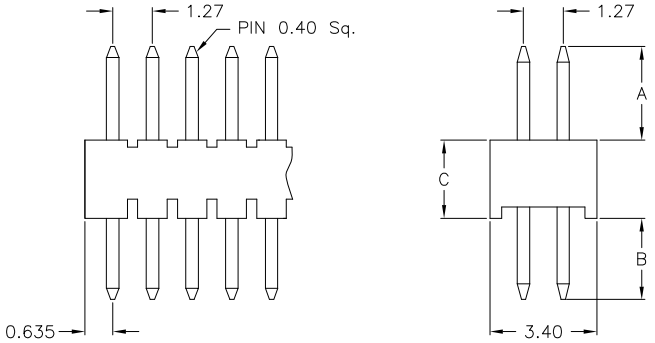

PCB Hole Layout

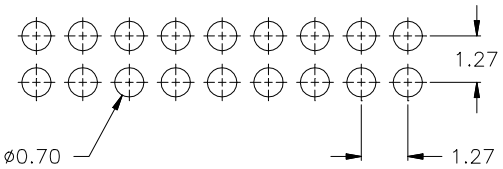

PCB Hole Layout

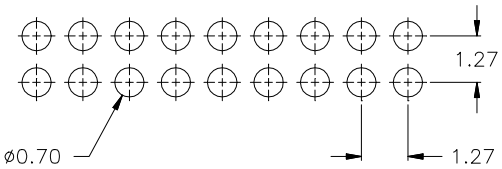

Specifications

Current rating	1 A	Operating temperature	- 40°C to +105°C
Insulation resistance	1000 MΩ min.	Contact material *(RoHS compliant)*	Copper Alloy
Withstanding voltage	500 V AC	Insulator material *(RoHS compliant)*	PA6T UL 94 V-0

How to order

SL2 - xxx - S xxx/x - 55/11

Nbr of pins
006 to **100**

Pin code	DIM "**A**"	DIM "**B**"	DIM "**C**"
063/1	3.00 mm	2.30 mm	1.00 mm
063/2	7.00 mm	2.30 mm	1.00 mm
063/3	5.00 mm	2.30 mm	1.00 mm
063/4	3.10 mm	1.90 mm	1.00 mm
063/5	2.80 mm	2.50 mm	1.00 mm
064/0	7.50 mm	5.00 mm	1.50 mm
Insulator thickness 2.00mm on request.			
081/1	3.00 mm	2.60 mm	2.50 mm
081/2	4.00 mm	2.60 mm	2.50 mm
other dimensions on request			

Plating
55 = Gold
other platings on request

1.27mm Pin Header & Board Spacer

1.27mm x 2.54mm Board Spacer

RoHS compliant

E-tec Interconnect

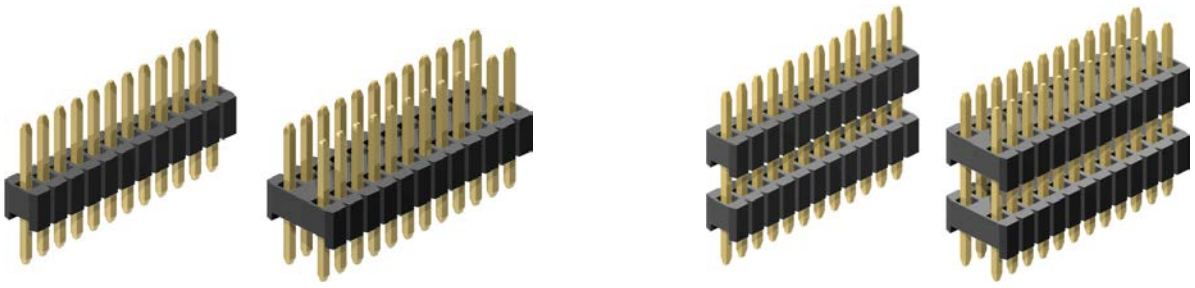

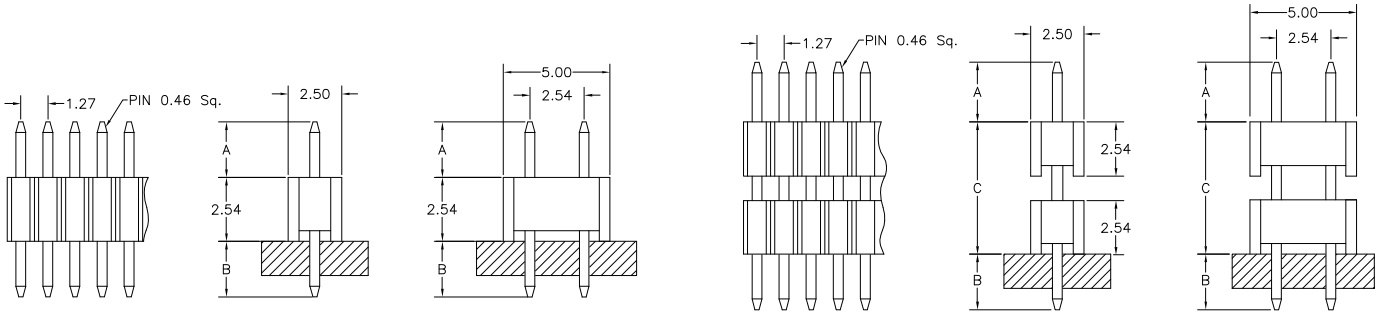

SL 1 SL 2 SP 1 SP 2

Specifications

Current rating	1 A
Insulation resistance	1000 MΩ min.
Withstanding voltage	500 V AC
Operating temperature	- 40°C to +105°C
Contact material *(RoHS compliant)*	Copper Alloy
Insulator material *(RoHS compliant)*	PA6T UL 94 V-0

PCB Hole Layout

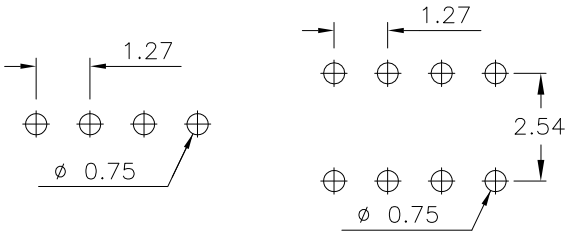

How to order

S xx - xxx - S xxx/xx - 55/1

Single plastic	Nbr of pins
L1 = single row	single row = **003** to **050**
L2 = dual row	dual row = **006** to **100**

Pin code	DIM "**A**"	DIM "**B**"
079/01	2.80 mm	2.60 mm
091/01	4.00 mm	2.60 mm
111/01	6.00 mm	2.60 mm
164/01	2.50 mm	11.40 mm
other dimensions on request		

Plating
55 = Gold
other platings on request

Double plastic " Boardspacer "	Nbr of pins
P1 = single row	single row = **003** to **050**
P2 = dual row	dual row = **006** to **100**

Pin code	DIM "**A**"	DIM "**B**"	DIM "**C**"
084/01	1.10 mm	1.30 mm	6.00 mm
116/01	2.80 mm	2.60 mm	6.20 mm
152/01	6.00 mm	3.00 mm	6.20 mm
127/01	2.20 mm	2.20 mm	8.30 mm
137/01	3.00 mm	2.30 mm	8.40 mm
160/06	3.00 mm	4.00 mm	9.00 mm
210/06	5.50 mm	2.50 mm	13.00 mm
218/01	6.00 mm	1.80 mm	14.00 mm
other dimensions on request			